OUTBACK SOLAR PUMPS

WATCHMAN 4G

Remote Water Flow Monitor with 0.9W Solar Panel



The OUTBACK Watchman 4G is a solar-powered monitoring system designed to track water flow and usage in remote pumping installations. Featuring 4G connectivity, a built-in 0.9W solar panel and rechargeable battery, it delivers water usage data to an online dashboard without requiring Wi-Fi or mains power. Ideal for rural and off-grid water systems.

FLOW TRACKING
Water usage
Pump production

ONLINE ACCESS
IQFLOW dashboard
Phone & computer

4G CONNECTIVITY
Remote monitoring
No Wi-Fi required

SOLAR POWERED
0.9W panel
3000mAh battery

AUSTRALIAN SUPPORT
Local stock & service

PRODUCT OVERVIEW

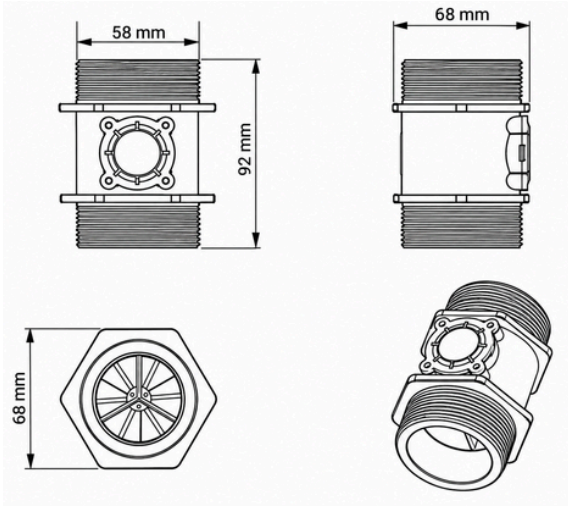

SPECIFICATIONS

Model	Watchman 4G
SKU	ACC-WM0XX-4G
Product Type	Remote Flow Monitor
Monitoring Technology	4G Cellular / IoT
Online Platform	IQFLOW
Available Sizes	25mm (1") / 50mm (2")
25mm Flow Range	2–100 L/min
50mm Flow Range	10–200 L/min
Published Pressure Figure	1,750 kPa*
SIM Card	4G IoT SIM Included
SIM Data Allocation	500MB (12 Months)
Installation	Inline Pipe Connection
Warranty	24 months

KEY FEATURES

- 4G monitoring without Wi-Fi or mains power.
- 0.9W solar panel with rechargeable battery.
- Tracks water flow and usage remotely.
- Online dashboard for easy monitoring.

RECOMMENDED APPLICATIONS

Solar pump systems
Remote water transfer
Agricultural irrigation
Remote locations

Ideal for remote solar pumping systems requiring reliable water-flow monitoring, usage tracking and convenient access to performance data.

RELIABLE WATER | SUSTAINABLE POWER | AUSTRALIAN OWNED